MODUL ZA SAMODEJNO NASTAVLJANJE PARAMETROV AVTOPILOTA

Tine Tomažič, Pipistrel d.o.o.

NADZOR NAGIBANJA

Shema za izvajanje vzbujanja in meritev:

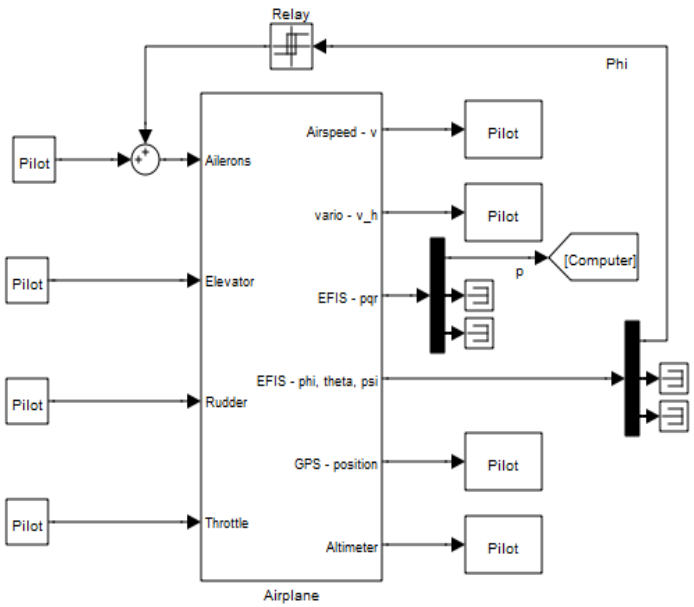

Odzivi prej in potem:

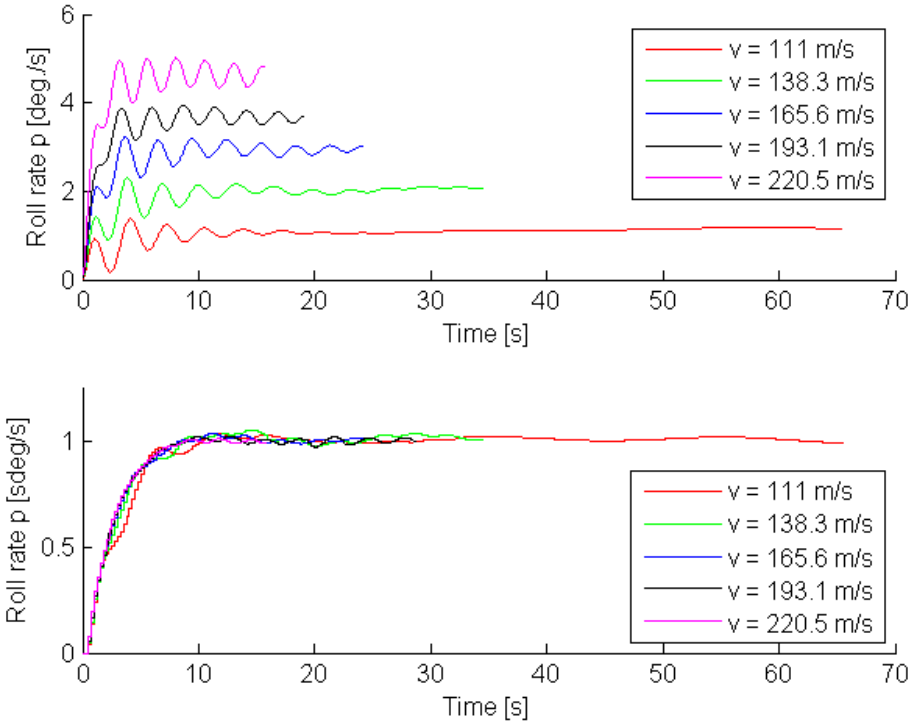

SHEMA DELOVANJA SAMONASTAVLJIVEGA AVTOPILOTA

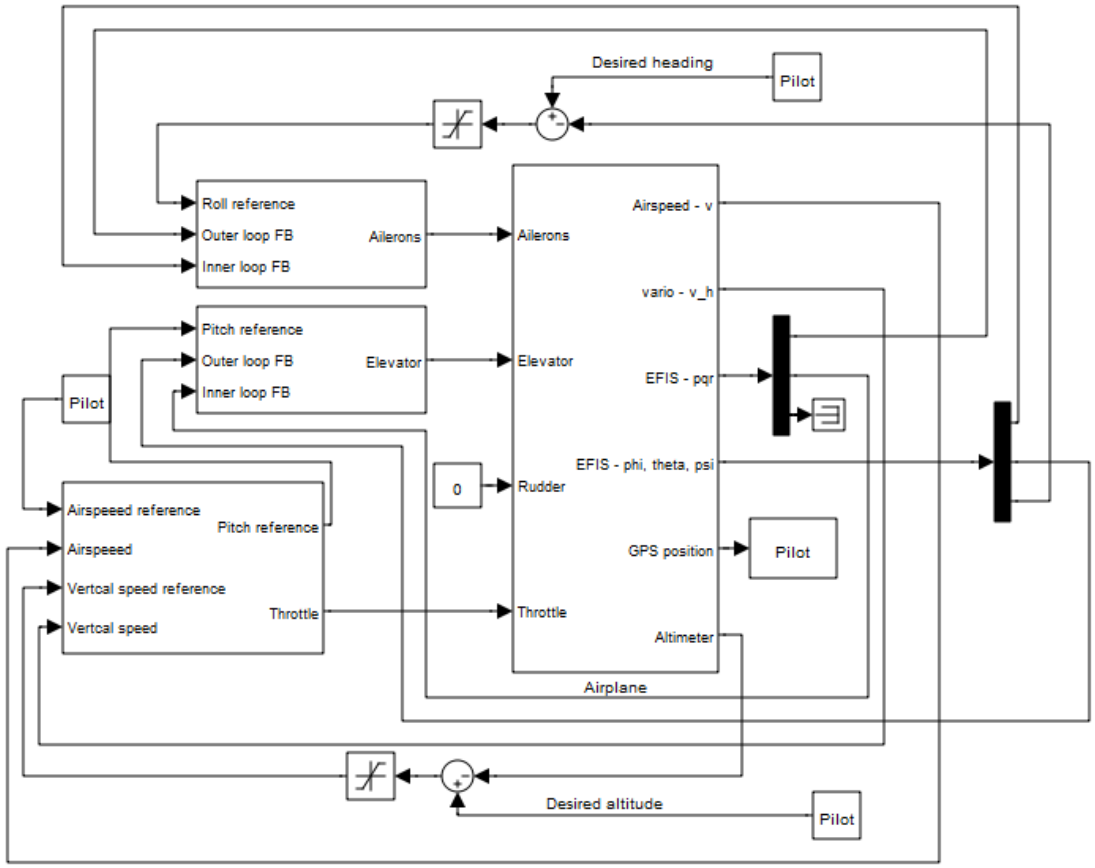

NO INTENTIONAL SPINS
Seru 1294
Hysteresis 3.0
Amplitude -8.0
Relay Test
Elevator Enable
P term 1.5
I term 9.3
D term 0.0
Outer loop
Time 24808.7
Roll -0.595
Pitch 0.391
Yaw 352.319
Vario 0.1
Altitude 141.8
Airspeed 0.0
Balance -0.36
Period Start
PitchRef 0.1
Elevator -2.7
RollRef 1.6
Aileron 4.4
/media/sda1/Log-06_52_43.csv
NEXIS
TOWING
MAX OIL TEMP 130°C

TOW HOOK

TOW HOOK